ECEU646 Midterm Exam

with Solutions

Prof. Charles A. DiMarzio
Department of Electrical and Computer Engineering
Northeastern University

Fall Semester 2008
16 October 2008

Each problem is worth 25 points. The subparts are split somewhat equally, except for rounding fractional points in the student's favor.

A check mark on a section means it is right. An x means it is wrong. An "ok" means that this part is correctly done starting with an incorrect result from a previous part, or that for some other reason, I gave you full credit for an answer that was incorrect. A negative number indicates points taken off for something partially correct.

1 Reflecting Prism

Figure 1.1 shows a glass 45–degree prism with an index of refraction of $n = 1.5$, used as a reflector. If the light coming from the left is incident normally, $\theta_1 = 0$, then the beam will be deflected through 90 degrees and will exit downward. The deviation angle is

$$\Delta = 90deg. \tag{1.1}$$

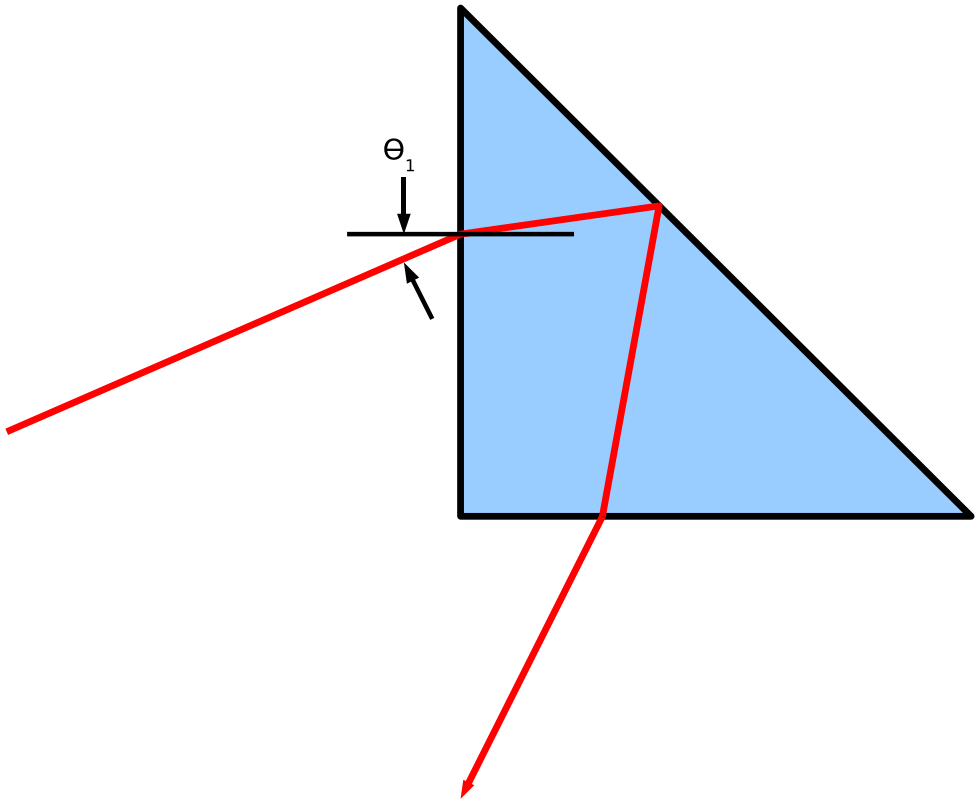

Figure 1.1: REFLECTING PRISM. The prism is made of glass with an index of refraction of $n = 1.5$. The hypotenuse has an angle of 45 degrees with respect to the other faces.

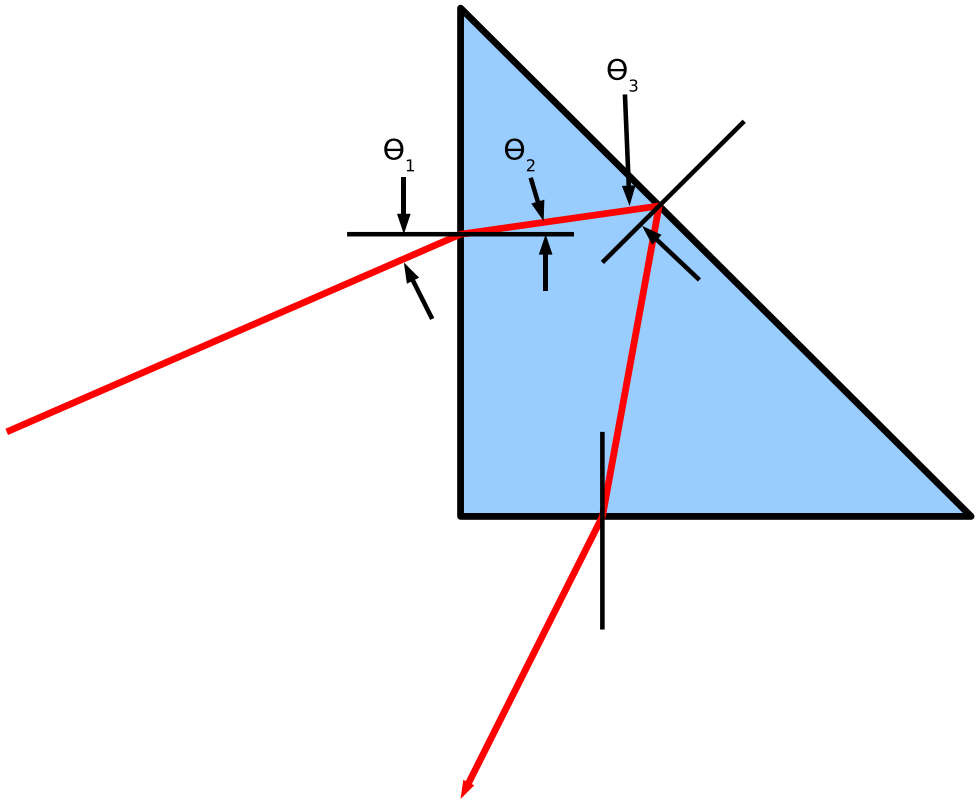

Figure 1.2: REFLECTING PRISM. The angles are shown to aid in solving the problem.

1.1 Changing Deviation

If the beam is tilted to an arbitrary angle, θ_1, what is the new deviation angle?

We identify the three relevant angles in Figure 1.2. Because of the symmetry, the angles after reflection are the same as the corresponding angles before reflection. The output angle with respect to the normal at the output face will be exactly the same amount as the input angle. Thus the 90–degree angle of deviation decreases by $2\theta_1$.

$$\Delta = 90\,\mathrm{deg} - 2\theta_1 \tag{1.2}$$

1.2 Total Internal Reflection

For what input angle, θ_1, does total internal reflection occur at the hypotenuse?

Total internal reflection occurs for

$$\sin\theta_3 > \sin\theta_c = \frac{1}{n} \tag{1.3}$$

Working backward,

$$\sin\theta_3 > \sin\theta_c = \frac{1}{1.5} \qquad \theta_3 \geq 41.8deg, \tag{1.4}$$

$$\theta_3 = 45deg - \theta_2 \qquad \theta_2 \leq 45deg - 41.8deg = 3.2deg. \tag{1.5}$$

$$\sin\theta_2 = \frac{\sin\theta_1}{n} \qquad \sin\theta_1 = 1.5\sin\theta_2 \qquad \theta_1 = 4.8deg \tag{1.6}$$

2 Confocal Microscope

Figure 2.1 shows a part of a confocal microscope. The sample on the right is a piece of skin with an index of refraction of $n = 1.4$. We adjust the position so that we image the surface of the skin. Then we move the sample 100 micrometers to the left. If the index were 1.0 we would now be focused on structures at a depth of 100 micrometers into the tissue.

2.1 Refraction

Redraw the figure, showing the bending of the rays as they enter the skin, and showing the new focus.

Rays bend toward the normal, as shown in Figure 2.2

2.2 Depth of Imaging

How deep is the actual focus into the skin now?

The actual focus is

$$z_{actual} = z_{apparent} \times n = 100\mu m \times 1.4 = 140\mu m. \tag{2.1}$$

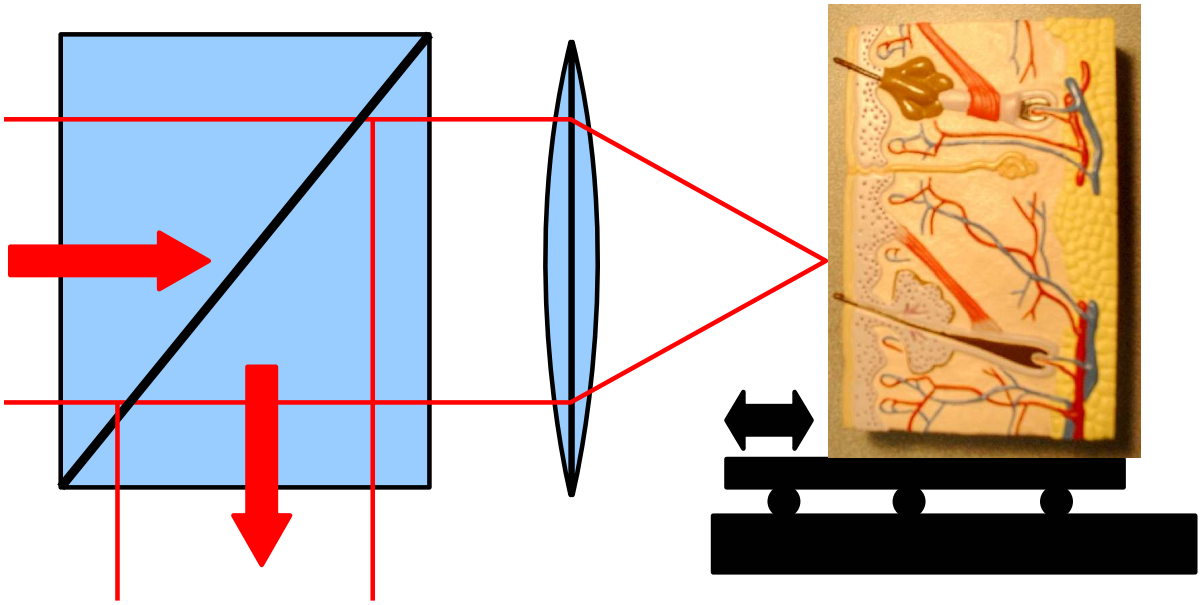

Figure 2.1: CONFOCAL MICROSCOPE. The microscope is initially focused on the surface of a skin sample.

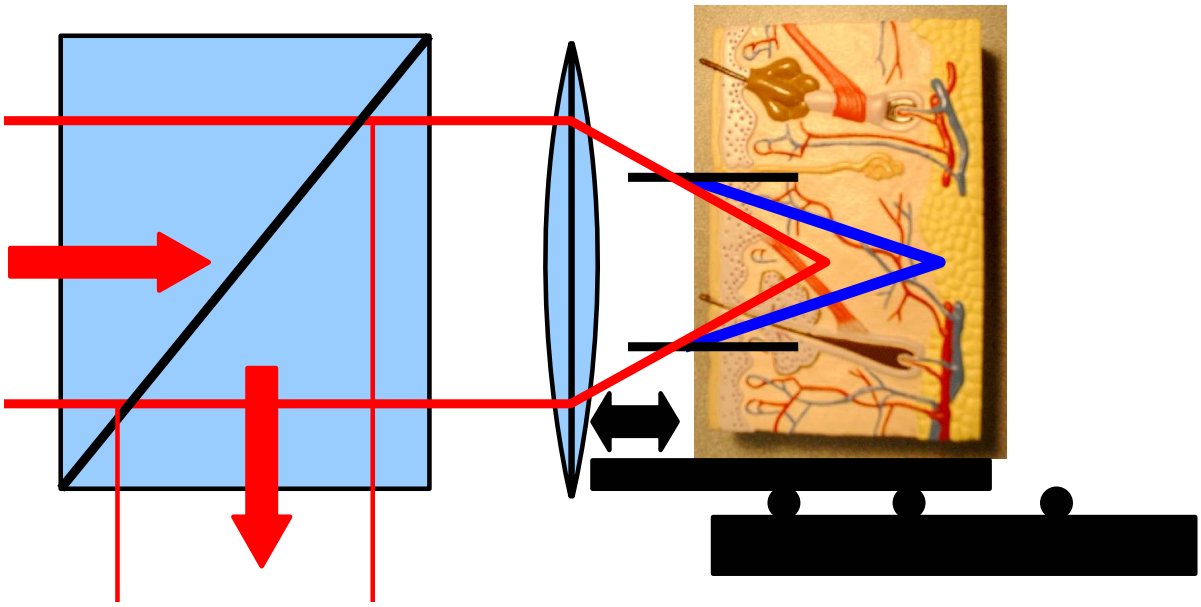

Figure 2.2: CONFOCAL MICROSCOPE. The microscope is focused into the skin sample. The focal point is less deep than the distance by which the skin has been moved.

2.3 Transit Time

Suppose that we could launch a very short pulse into the skin and measure the time it takes to return. In fact, there are techniques based on interferometry for doing this. If we measured the time it takes light to reflect back from a scattering object at this depth, and if we assumed that the light was traveling in vacuum, what would we compute for the depth? Assume the light travels along the axis.

The actual transit time would be increased by the ratio n. The actual depth, from Part 2.2 is $z_{actual} = 140\mu m$, so we would measure

$$z_{transit} = nz_{actual} = 1.4 \times 140\mu m = 196\mu m. \tag{2.2}$$

2.4 Bonus Question added During Exam

How would it be different if we considered a ray that is not along the axis?

Fermat's principle says that light travels the path that takes the shortest time, or shortest OPL. We developed our imaging equation on the assumption that for an image to form, all the paths must have equal OPL.

3 Principal Planes

In an experiment, an object $2cm$ before the first vertex of a glass plano–convex lens is imaged $5cm$ after the second vertex as shown in Figure 3.1. The lens is 9 mm thick.

3.1 Principal Planes

Where are the principal planes?

Using the 1/3 rule, the principal planes must be spaced 1/3 the thickness or 3 mm apart. The 1/3 rule applies because the lens is glass. We also know that for a plano–convex lens, one principal plane is at the curved vertex. Therefore, the principal planes are as shown in the top of Figure 3.2.

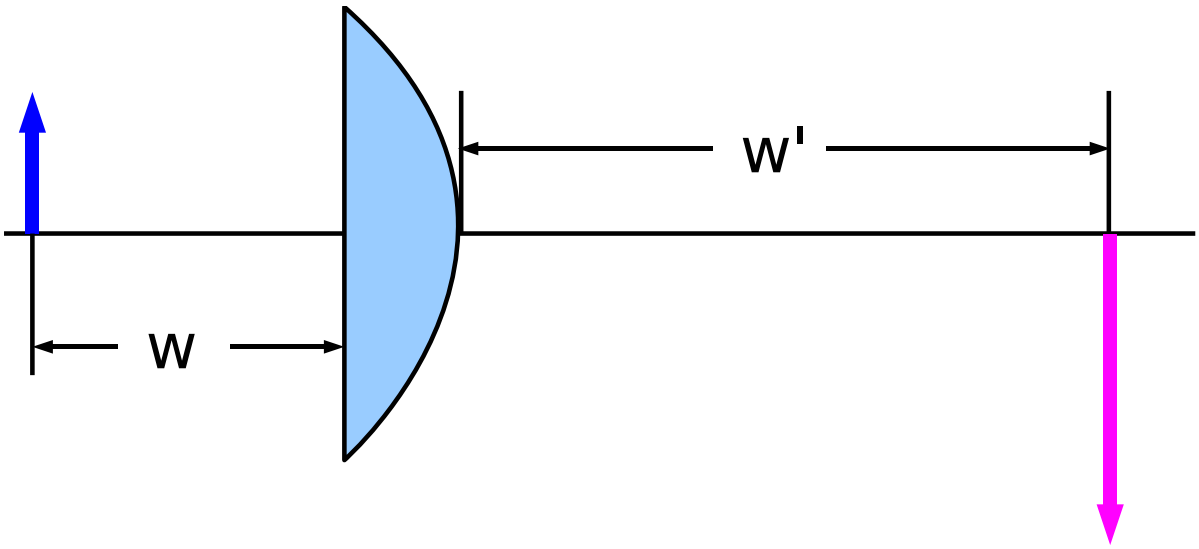

Figure 3.1: PLANO–CONVEX LENS. The object is located a distance $w = 2cm$ in front of the first vertex, and the image is at a distance $w' = 5cm$ from the second vertex.

3.2 Focal Length

What is the focal length of the lens?

The object and image distance are

$$s = w + \frac{2}{3}0.9cm \qquad s' = w', \tag{3.1}$$

and the focal length, f is given by

$$\frac{1}{f} = \frac{1}{s} + \frac{}{s'} \qquad \frac{1}{f} = \frac{1}{2.6cm} + \frac{1}{5cm} \qquad f = 1.7cm \tag{3.2}$$

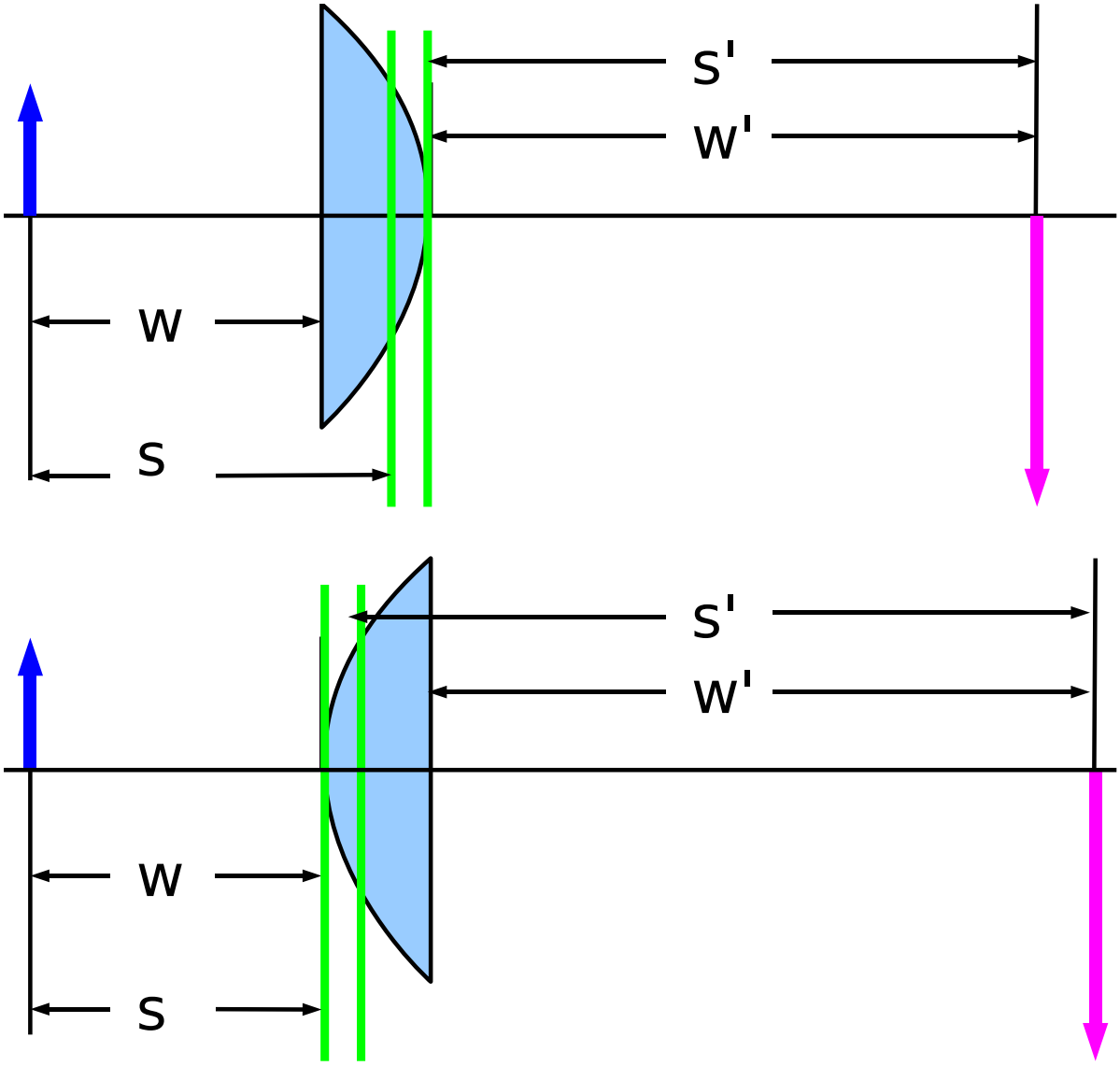

Figure 3.2: PROBLEM SOLUTION. Using the 1/3 rule, the principal planes are separated by 1/3 the thickness of the lens. The second principal plane is at the second vertex. Reversing the lens moves the principal planes, and changes s and thus s' and w' in the lens equation.

3.3 Reversing the Lens

If we reverse the lens, keeping the vertices and the object in the same locations, what is the new image location?

In the bottom of Figure 3.2, we see that the principal planes have changed location. Now

$$s = w = 2cm \qquad s' = w' + \frac{2}{3}0.9cm \tag{3.3}$$

Thus, the lens equation gives us

$$\frac{1}{s'} = \frac{1}{f} - \frac{1}{s} = \frac{1}{1.7cm} - \frac{1}{2cm} \qquad s' = 11.3cm \tag{3.4}$$

and then

$$w' = 11.3cm - \frac{2}{3}0.9cm = 10.7cm \tag{3.5}$$

4 Scanner

Consider the pre–telescope scanner for a laser radar as shown in Figure 4.1. The first lens of the afocal telescope has a focal length of $f_1 = 40cm$ and the second $f_2 = 80/cm$. The lenses are both f/5. The goal is to be able to scan the beam through $\theta_{max} = 90milliradians$ at the telescope output. You may assume thin lenses for this problem. The goal is to send laser light to an image plane very far away. You may assume that the image distance is infinite. Because the light is collimated, you may also assume that the object distance is infinite.

4.1 Magnification

What is the magnification of the telescope (defined here going from left to right)?

$$m = -\frac{f_2}{f_1} = -\frac{80cm}{40cm} = -2. \tag{4.1}$$

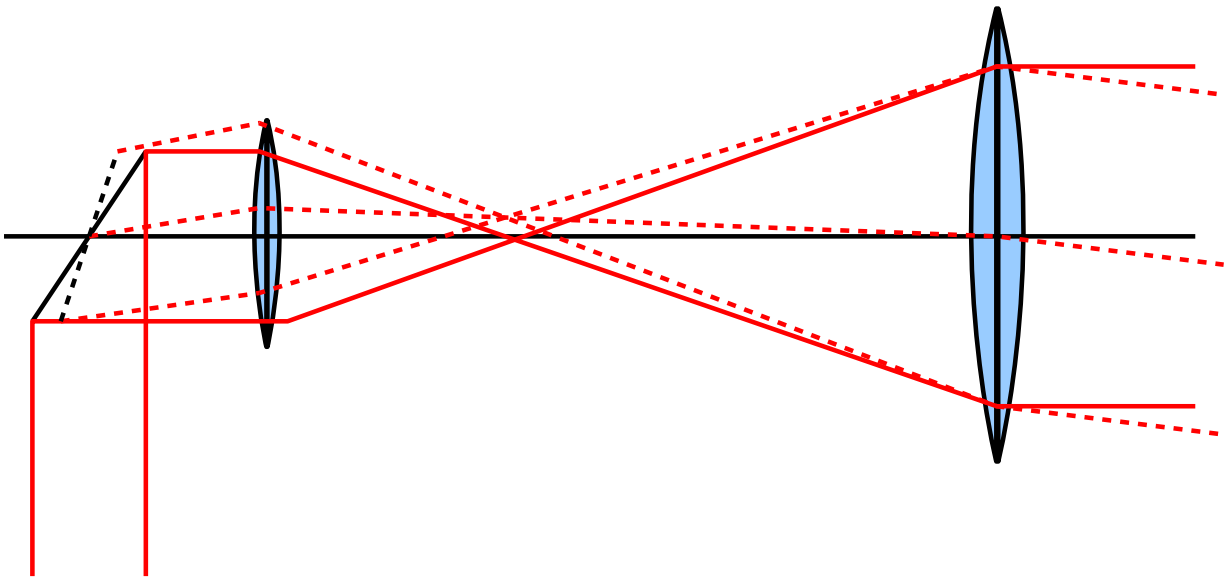

Figure 4.1: SCANNER. A moving mirror deflects the beam entering the telescope.

4.2 Scan Angle

To achieve the desired scan angle at the output, through what angle must the mirror move? (STQ = "Slightly tricky question")

The magnification of the telescope is $m = 2$, so the angular magnification is $m_\alpha = 1/m = 1.2$. Thus the input beam must move twice the desired angle. However, the beam moves through an angle double that of the mirror motion, so the actual mirror motion is 90 milliradians.

4.3 Pupil Location

Where should the scanning mirror be placed to ensure that the beam will pivot about the second lens?

Treating the second lens as an object for the first lens, it has an image at s' given by

$$\frac{1}{s'} = \frac{1}{f_1} - \frac{1}{s} \qquad s = f_1 + f_2$$

$$\frac{1}{s'} = \frac{1}{f_1} - \frac{1}{f_1 + f_2} \qquad s' = f_1\left(1 + \frac{f_1}{f_2}\right) = 80cm\left(1 + \frac{40cm}{80cm}\right) = 60cm \quad (4.2)$$

4.4 Mirror Size

How large must the diameter of the mirror be in order that the full aperture of the pupil may be used?

Because the second lens is the aperture stop (and the exit pupil), and it is f/5, it has a diameter of $f_2/5 = 80cm/5 = 16cm$. Its image at the entrance pupil (at the mirror) has a diameter determined by Equation 4.2 and

$$x' = -x\frac{s'}{s} = -16cm\frac{60cm}{120cm} = -8cm.. \tag{4.3}$$

We ignore the minus sign, because we are only interested in the diameter, so the pupil diameter is $d_p = 8cm$. Of course, we could have guessed this from the magnification. The mirror is at 45 degrees, so it must be

$$d_{mirror} = \frac{d_p}{\cos(45deg)} = 11.3cm. \tag{4.4}$$